CORE LABS
RADIOGRAPHIC
USA

Digital Radiography (DR)

Computed Radiography (CR)

Conventional Radiography

CHESAPEAKE MEDICAL SYSTEMS, INC.
Radiologic Technology to the Mid-Atlantic since 1987

MADE IN THE USA
www.corelabshome.com

...DurableReliablePrecisionCrafted

FDA GMP QUALITY EVERYDAY, EVERYWHERE Health Canada Santé Canada

Introduction

Dear Rad User,

You are about to purchase the most reliable & best performing radiographic equipment available. CoRE labs products are designed to withstand the rigors of high volume imaging environments. Made in the United States of America, with the finest materials, we are sure you will be proud of your investment in what we consider the best radiographic equipment available. Our systems are found in leading hospitals, clinics & orthopedic offices throughout North America, South America & the Caribbean. We welcome the opportunity to sell you products through our exclusive, professional, nationwide dealer network. We are confident you won't be disappointed in your choice.

Sincerely,
R.Miller
CFO

We are proud to manufacture in America and strive to make the very best equipment money can buy, making it available to every imaging clinic, not just ones with substantial budgets.

CORE LABS RADIOGRAPHIC USA

RADIOGRAPHIC SUITES

Custom backlit LCD display has large easy to read characters for ease of view in any lighting condition

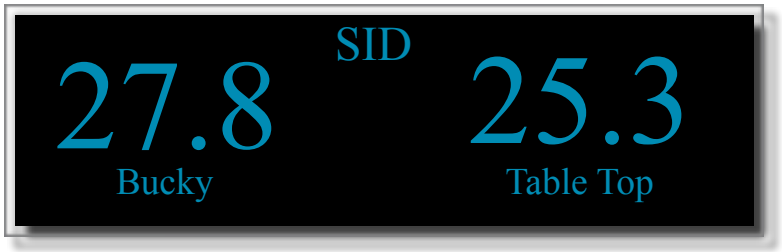

CoRE labs suites were designed to work seamlessly for the fastest throughput clinical environments. With continuous SID display, rapid one hand positioning and optional SID automatic tracking, your radiographic department can be assured to care for a fast paced workload. To speed installation, all suites come with onboard 24v power and wiring interfaces for ancillary equipment. Our award winning user interface provides an easy to read, large backlit LCD display which shows SID and tube angulation. With continuous SID display, one can achieve 40" SID with any table height allowing tall and short technicians alike to work in a height environment which is comfortable to them. Operator fatigue is minimized through European & American engineered designs, providing less than 5 pounds necessary force, for movement in all directions.

OVERHEAD TUBE SUPPORT (OTS/OTC)

The halo tube support provides ultimate flexibility to facilitate a wide range of x-ray procedures.

Fully counterbalanced, this heavy-duty system can be easily positioned at any selected point within its total range of travel.

The x-ray tube rotates a full 360-degrees about its vertical and horizontal axis with mechanical indexing at each 90-degree position.*

The ergonomic operator control panel provides convenient selections to allow the tube to be moved in the longitudinal, transversal, vertical and rotational directions, and allows for table/wall Bucky centering.

A single squeeze-handle control provides rapid positioning to speed patient throughput.

Clean, carefully laid out cable management.

The LCD display indicates SID to tabletop/wall Bucky in inches or centimeters (calibrated at installation) and angulation of x-ray tube in degrees.

The "Intelligent Software" allows for fast and easy access to calibration and configuration.

Platform mount is standard, and a 10" orthopedic column extension is optional.

On board 24v power for collimator etc...

Durable powder coat finish provides protection far greater than typical painted systems.

*Ninety degree tube rotation detents, every 15 degree axial rotation detents.

The halo overhead tube support is a heavy duty, hospital grade, manually operated, fully counterbalanced ceiling mounted unit. Rapid one hand positioning is possible from the front, all-locks-release squeeze handle.

5,000,000 cycle-life Mil-Spec interface switches

MADE IN THE USA
www.corelabshome.com

Adaptable to ceiling heights between 99" - 132"

Four

OTS/OTC SPECIFICATIONS

Installation of OTS Systems in spaces you never thought possible....

Shown below with 9.5' ceiling installation "gooseneck down"

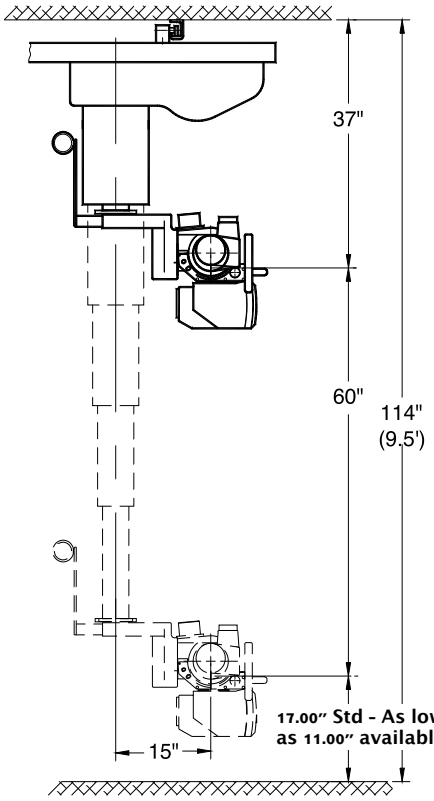

Featuring optional motorized vertical motion for wall stand & table tracking

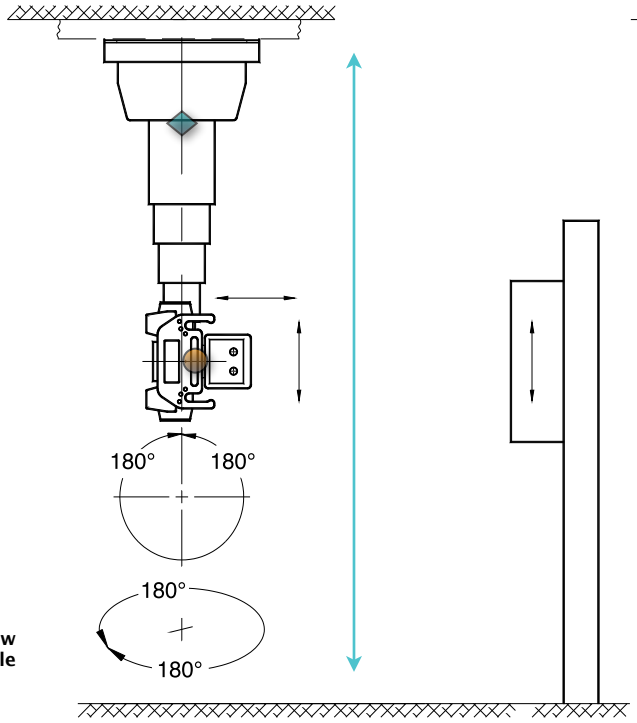

Shown below with 8.5' ceiling installation "gooseneck up"

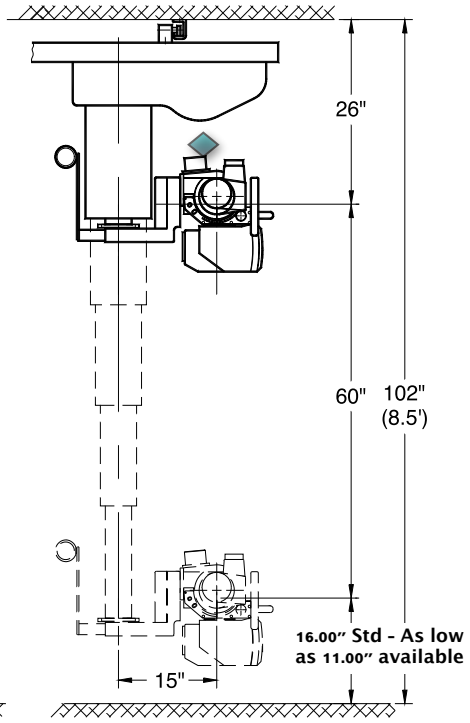

(Model No: 02-000)

-Longitudinal Rail Length: Standard - 14' (4.27m)
*Optional - 12', 16', 18'
-Transverse Bridge Length: Standard - 120" (3.03m)
-Vertical Travel: Standard - 60" (1,524 mm)
-Standard, Fully functional Installation On Ceiling Heights As Low As 99" -- Even Lower Ceiling Height Installations Available...
-Total Weight Of Standard Unit: 400 lbs. (181 Kg)

Component Weights

-Transverse Bridge - 109 lbs. (49.0 Kg)
-Telescope Carriage - 214 lbs. (96.3 Kg)
-Long Rails (2) 14'-70 lbs. (31.6 Kg) 12'-60.2 lbs. (27.1 Kg)
16'-80.3 lbs. (36.1 Kg) 18'-90.4 lbs. (40.7 Kg)
-Electrical Requirements: 115/220 VAC, 50/60 Hz, 5Amps
-Fits 8.5', 9.5' & optionally 10.0' & 11.0' ceilings

Center of gravity

One hand all-locks-release handle

Custom equine / large animal systems available - ask your dealer for more information...

FLOOR MOUNT TUBE STAND (FMTS)

Freestanding design without wall attachment for rapid installation, ease of alignment & smooth travel

Custom Configurations up to 1,000,000 H.U. tubes

The triton's user interface displays real time table / Bucky SID. When rotated left or right, the backlit LCD display changes from SID inches, to tube angulation, in one-degree increments.

Once the tube angle achieves ninety-degrees, it displays real time SID distance to a wall stand. This user interface allows quick SID positioning and thus rapid patient throughput.

Shown below, the triton tube stand features an exclusive seamless column for extreme rigidity. This column contains hardened, serviceable, bearing races for limitless life -- our tube stands are designed to last decades. Also included is a positive vertical lock for position retention during power outage as well as potentiometers for height & longitudinal feedback for accurate SID positioning. Counter weights are secured by twin, multi-stranded stainless steel cables. Ball bearing construction throughout. Finished with durable powder coated surfaces and bright nickel hardware, to give long-lasting, professional finish.

-True Hospital Grade.

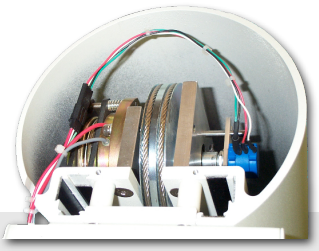

Seamless Column Design

Freestanding Design

Featuring the same user interface as the award winning halo OTS...

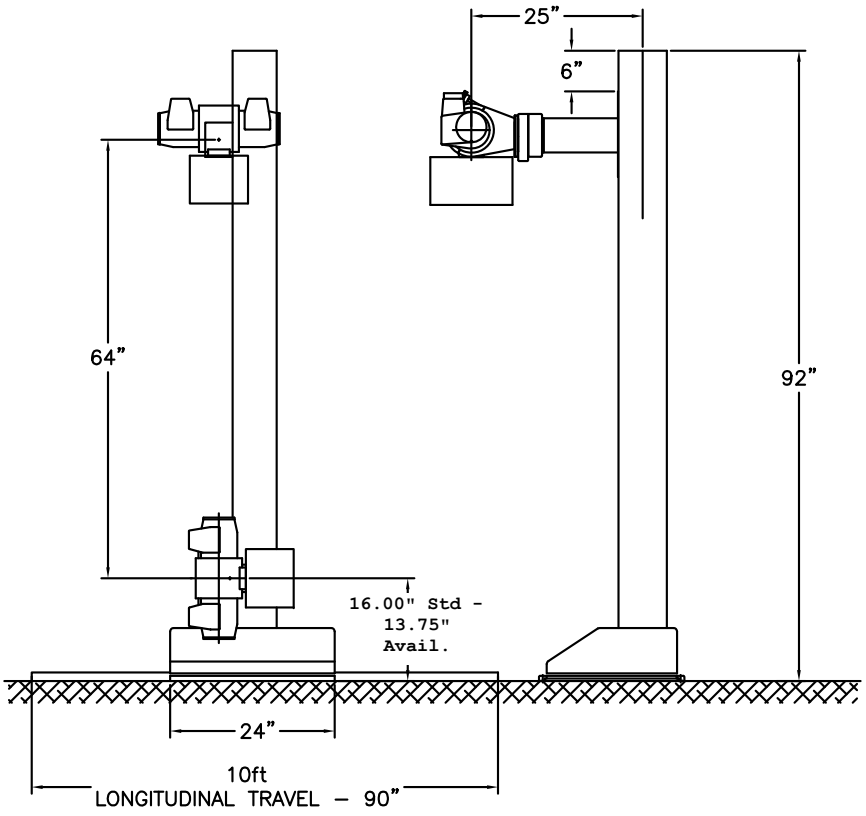

(Model No: 09-000)

-Standard Longitudinal travel 90”

**Extended Travels Available

-Overall height 92”

-Minimum distance to wall 12”

-Max height of tube center 79”

-Minimum height of tube 16.00" (13.75 Available)”

-Collapsed length from stand 25”

-Travel from table center +/- 5” each direction

-Column rotation 180 degrees each direction

-Tube rotation 180 degrees each direction

-Base footprint 120” x 20”

-Freestanding design

-Optional platform / port & large trunnion mounts available

-Custom tube applications avail

-Electrical requirements: 115/220-VAC, 50/60Hz, 5 Amps

-Onboard 24v power for collimator

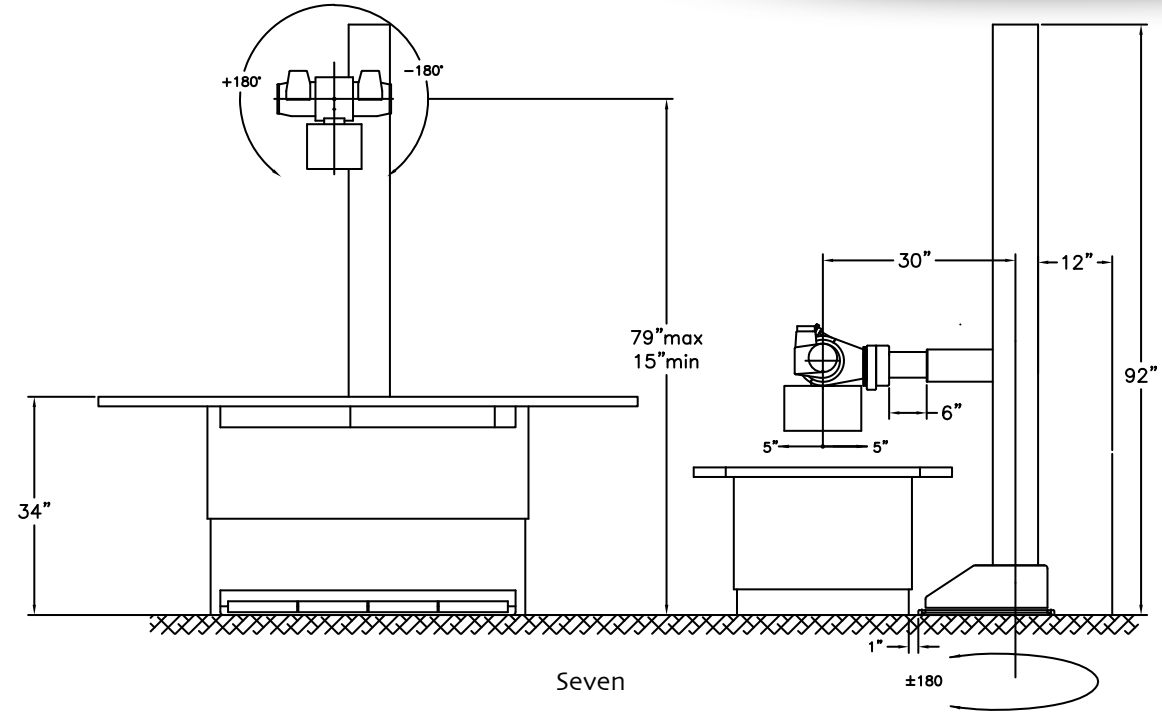

ELEVATING 6-WAY RADIOGRAPHIC TABLE (atlas)

4-WAY RADIOGRAPHIC TABLE (aries) Not Shown

-True Hospital Grade Radiographic Tables
-Space Saving Compact Designs
-Elevating and Four-Way Floating Tabletop (atlas)
-Fixed Height Four-Way Floating Tabletop (aries)
-Durable and Reliable Designs
-True 600 Lb. Capacities
-Priced for Maximum Investment Return
-Precision Solid Steel Scissor Lift - 3/4" Thick (atlas)
-Durable Powder Coated Surfaces

-Smooth, Flat Tabletop For Patient Comfort
-Aircraft Aluminum & Steel Construction
-Ball Bearing, Linear Bearing & Bronze Bushing Motion Components
-Custom Hospital Grade Low Voltage Actuator - Expected 60,000 Cycle Life (atlas)
-Slide Out PC Board For Easy Service / Installation

Shown with optional patient handles

SMOOTH TABLETOP DESIGN - AN INDUSTRY MUST

MADE IN THE USA

TABLES SPECIFICATIONS

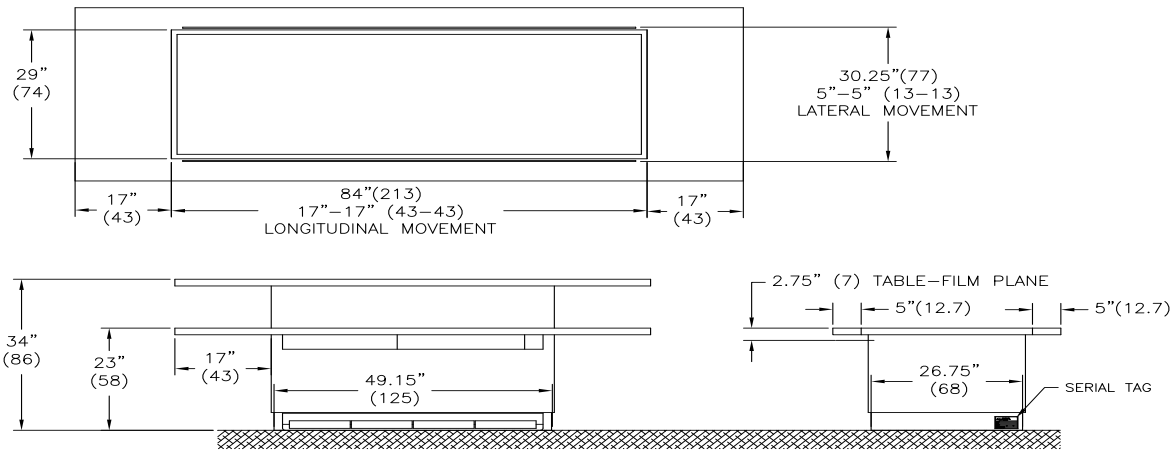

The atlas elevating 6-way table is designed as a "stand alone" system, consisting of plug-in cables and a single board interface compatible with all standard x-ray equipment.

The tabletop electromagnetic locks are released by applying pressure to pedals located at front of the table.

The table height is adjustable to accommodate ambulatory, wheel chair, or gurney patients. Easier transfer is accomplished for both patient and operator.

With the atlas table, the operator can easily, quietly elevate and accurately position a patient weighing up to 650 pounds. The atlas elevating table has been life tested to 60,000 cycles with a 600+ lb load.

Foot pedal control of motorized vertical movement.

Optionally, the foot pedal controls can be configured to function only when an auxiliary button is depressed.

atlas (Model No: 05-000)
aries (Model No: 04-000)

-Tabletop:	84" x 30.25"
-Tabletop Height (motor driven with standard anti-collision feature):	23" to 34"
-Side Clearance:	17"
-Front & Rear Clearance:	5"
-Cassette Holder Travel:	20"
-Table Pedestal Length:	50.75"
-Table Pedestal Width:	28.37"
-Electrical Requirements:	115VAC, 50/60 Hz, 10 Amps
-Maximum Patient Weight:	650 lbs.
-Transportation Weight:	620 lbs.

Compliance: CDR21CFR, chapter 1, subchapter J.

Options

Bariatric Magnet Boosting System for "Super-Strong" Tabletop Retention
Continuos SID Interface
Carbon Fiber Tabletop
Ion Chamber
Secondary Switch, Foot Pedal Safety
Buckies, Grids & Cassettes

The aries 4-way (No 04-000) table has the same specifications as the atlas but has a fixed table height of 30 inches.

14" x 17" Radiographic Wall Stand (flora)

14" x 36" Radiographic Wall Stand (orion) Not Shown

- Hospital Grade Wall Stands
- Extremely Rigid Durable Designs
- Exclusive Seamless Columns
- Accepts Buckies, Grids & Ion Chambers
- Left Hand Or Right Hand Load
- Positive Electronic Brakes - for position retention during power outage
- Fine Tunable Fully Counter-Balanced Carriages
- Easy Single Hand Operation
- Ball Bearing Construction - Durable Powder Coat Finishes
- Included PC Board Interface For Ion Chamber & Bucky
- Aircraft Aluminum & Steel Construction

Shown with optional patient handles & cassette tray

MADE IN THE USA
www.corelabshome.com

WALL STANDS SPECIFICATIONS

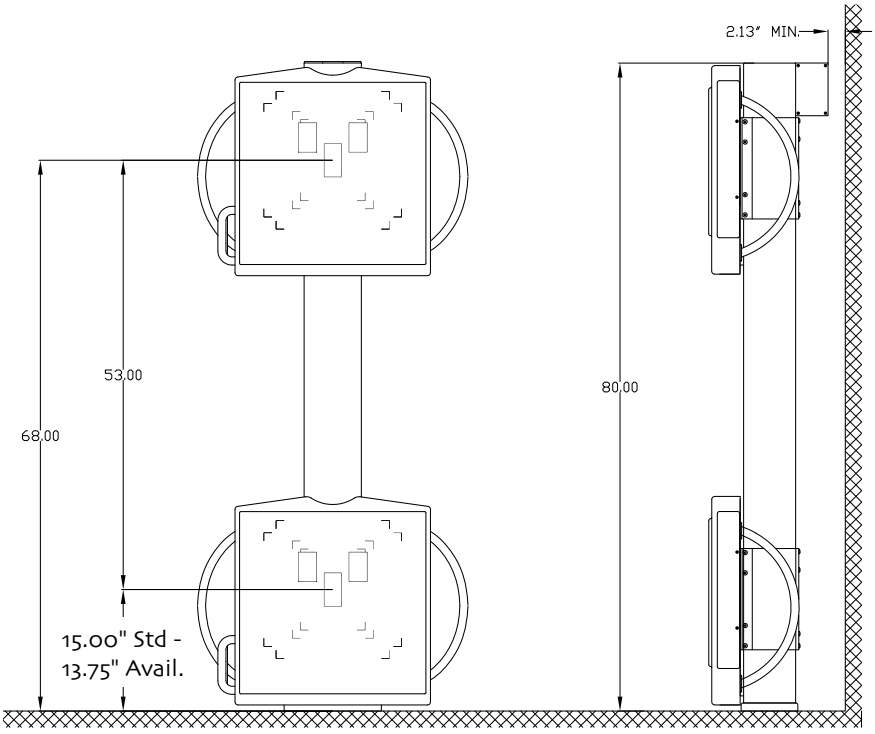

Top View With Cover Removed

CoRE labs Bucky stands are manufactured to the same quality level as our tube stands and tables. "flora" & "orion" are fully counterbalanced units and use electronic positive locks (for patient & technician safety in the event of power failure). Both will accommodate Bucky's, grids and trays from various manufacturers. Fine adjustment trim-weight systems are included.

Shown above, CoRE labs wall stands feature seamless columns for extreme rigidity. These columns contain hardened, serviceable, bearing races for limitless life -- our wall stands are designed to last decades. The mechanical system contains potentiometer height electronics for accurate vertical position feedback to a CoRE labs OTS or FMTS. Counter weights are secured by twin, multi-stranded stainless steel cables. Finished with durable powder coated surfaces and bright nickel hardware, to give long-lasting, professional appearance - True Hospital Grade.

"flora" (Model No: 08-000) 14" x 17"
"orion" (Model No: 08-100) 14" x 36"

-PC Board Interface for Tube Stand/Crane Tracking
-PC Board Interface for Ion Chamber & Bucky
-Accepts Bucky with dimensions 22.50" Width, 23.00" Depth & 2.7" Height
-Electrical requirements: 24 VAC, 50/60 Hz, 1 Amp
-375 lbs. shipping wt.

Options

Left Hand or Right Hand Load
Self Centering Cassette Tray
Ion Chamber
Automatic Size Sensing Tray
Side Mounted Patient Hand Grips
Overhead Patient Hand Grip
Buckies, Grids & Cassettes

Authorized Representative

CHESAPEAKE MEDICAL SYSTEMS, INC.

Radiologic Technology to the Mid-Atlantic since 1987

(800) 333-5643 www.chesapeakemed.com

CORE LABS
RADIOGRAPHIC
USA

CoRE labs 3720 S. Lipan Street Englewood, CO 80110 T. (303) 761-0131 F. (303) 948-8913
WEB: www.corelabshome.com EMail: info@corelabshome.com

Third Party Trademarks contained herein are the properties of their respective owners. CoRE labs believes the specifications herein are correct at the time of printing. However, specifications, standard equipment and options are subject to change without notice. Please ask your dealer for advice concerning the current availability of options and verify the optional equipment that you ordered. CoRE labs recommends safe operation of all X-Ray equipment, including equipment made by others. Please observe local laws and regulations at all times.

Form No: BR-002-Rev7